4. Front Disc Brake Assembly

A: REMOVAL

1. 15-INCH TYPE

CAUTION:
Do not allow brake fluid to come in contact with vehicle body. If it does, wash off with water immediately and wipe away completely.
1) Set the vehicle on a lift.
2) Loosen the wheel nuts.
3) Lift up the vehicle, and remove the front wheels.
4) Remove the union bolt, and disconnect the brake hose from the caliper body assembly.

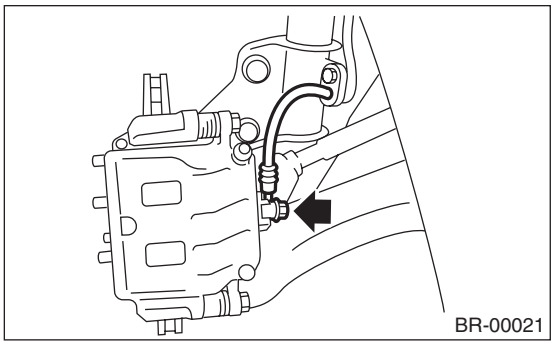

5) Remove the bolt securing the lock pin to caliper body.

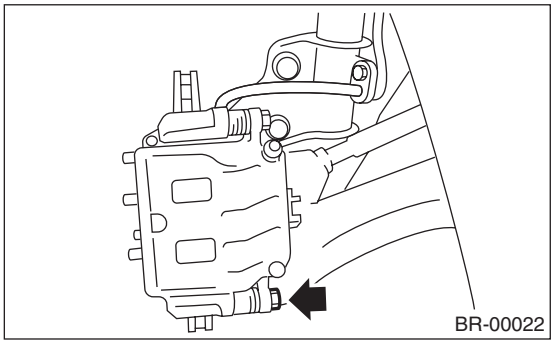

6) Raise the caliper body, and then move it toward vehicle center to separate it from the support.
7) Remove the support from housing.

NOTE:
Remove the support only when replacing the rotor or support. It need not be removed when servicing the caliper body assembly.

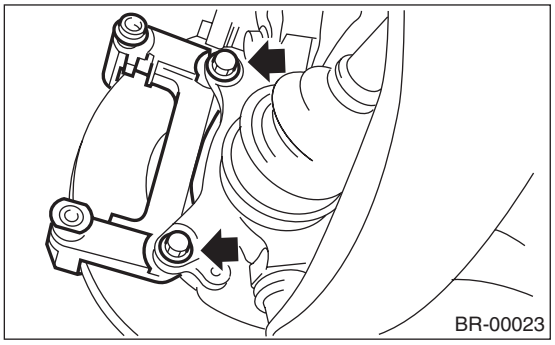

8) Remove mud and foreign matter from the caliper body assembly and the support.

2. 16-INCH TYPE

CAUTION:
Do not allow brake fluid to come in contact with vehicle body. If it does, wash off with water immediately and wipe away completely.
1) Set the vehicle on a lift.
2) Loosen the wheel nuts.
3) Lift up the vehicle, and remove the front wheels.
4) Remove the union bolt, and disconnect the brake hose from the caliper body assembly.
5) Remove the caliper body from the housing.

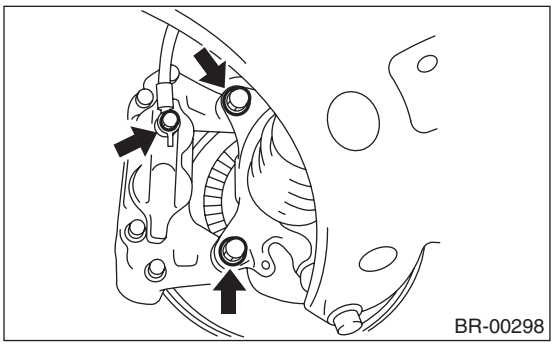

6) Remove mud and foreign matter from the caliper body assembly and the support.

3. 17-INCH TYPE

CAUTION:
Do not allow brake fluid to come in contact with vehicle body. If it does, wash off with water immediately and wipe away completely.
1) Set the vehicle on a lift.
2) Loosen the wheel nuts.
3) Lift up the vehicle, and remove the front wheels.
4) Remove the brake pad from the caliper body. <Ref. to BR-18, 17-INCH TYPE, REMOVAL, Front Brake Pad.>
5) Remove the union bolt (1) and brake hose from the caliper body assembly.
6) Remove the attachment bolts (2) from the housing.

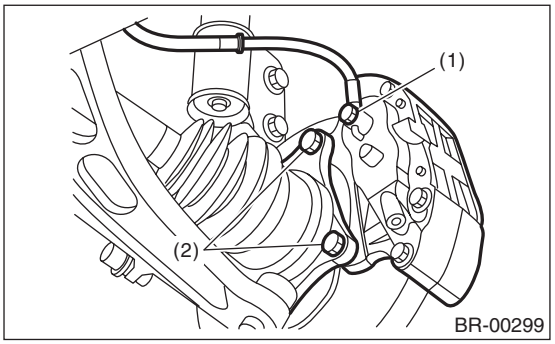

(1) Union bolt
(2) Attachment bolts

7) Remove mud and foreign objects from the caliper body assembly.

B: INSTALLATION

1. 15-INCH TYPE

1) Apply a thin coat of Molykote M7439 (Part No. 003602001) to the support.

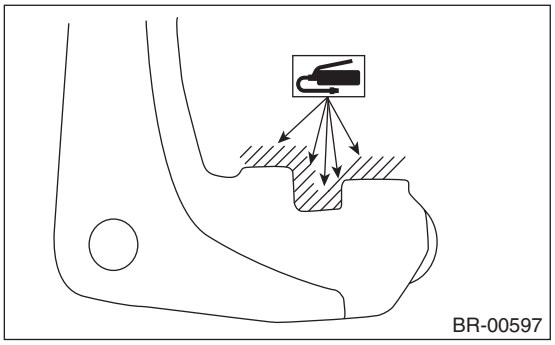

2) Install the support to the housing.

Tightening torque:
80 N·m (8.2 kgf-m, 59 ft-lb)

3) Apply a thin coat of Molykote M7439 (Part No. 003602001) to the contact surface between the pad and pad clip.

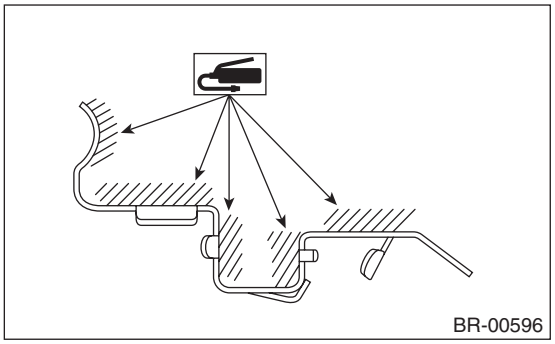

4) Apply a thin coat of Molykote AS-880N (Part No. K0777YA010) to both surfaces of the inner shim.

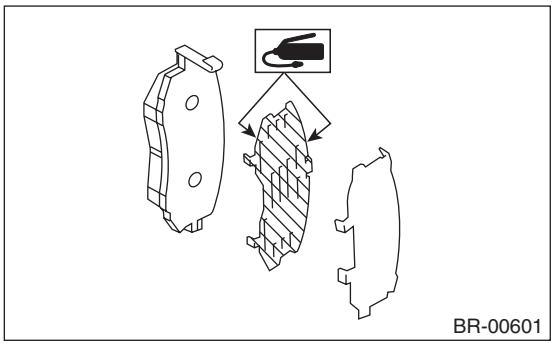

5) Install the pad to support.
6) Install the caliper body to the support.

Tightening torque:
26.5 N·m (2.7 kgf-m, 19.5 ft-lb)

7) Connect the brake hose using a new brake hose gasket.

Tightening torque:
18 N·m (1.8 kgf-m, 13.0 ft-lb)

8) Bleed air from the brake system.

2. 16-INCH TYPE

1) Install the caliper body to the housing.

Tightening torque:
80 N·m (8.2 kgf-m, 59 ft-lb)

2) Apply a thin coat of Molykote AS-880N (Part No. K0777YA010) to both surfaces of the pad inner shim, and Molykote M7439 (Part No. 003602001) to the sides of pad.

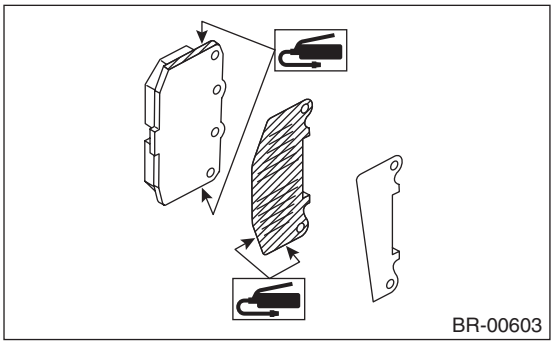

3) Install the pad to the caliper body.
4) Install the pad pin and cross spring to the caliper body.
5) Attach the M clip.
6) Connect the brake hose using a new brake hose gasket.

Tightening torque:
18 N·m (1.8 kgf-m, 13.0 ft-lb)

7) Bleed air from the brake system.

3. 17-INCH TYPE

1) Install the caliper body assembly to the housing.

Tightening torque:
155 N·m (15.8 kgf-m, 114.3 ft-lb)

2) Apply a thin coat of Molykote AS-880N (Part No. K0777YA010) to both surfaces of the pad inner shim, and Molykote M7439 (Part No. 003602001) to the sides of pad.

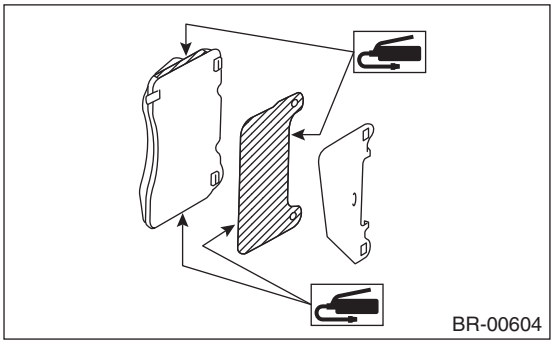

3) Install the pad to the caliper body.
4) Attach the cross spring.
5) Attach the pad pin.
6) Install the clip.
7) Connect the brake hose using a new brake hose gasket.

Tightening torque:
18 N·m (1.8 kgf-m, 13.0 ft-lb)

8) Bleed air from the brake system.

C: DISASSEMBLY

1. 15-INCH TYPE

1) Remove mud and foreign matter from the caliper body assembly and the support.

CAUTION:
Be careful not to allow foreign matter to enter the brake hose connector.

2) Place a wooden block in the caliper body as shown in the figure to prevent the piston from jumping out and being damaged.
3) Gradually apply compressed air via the brake hose installation hole to push the piston out.

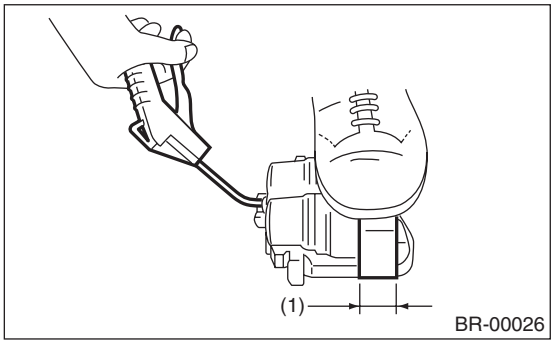

(1) Place a wooden block of 30 mm (1.18 in) width.

4) Remove the piston boot.

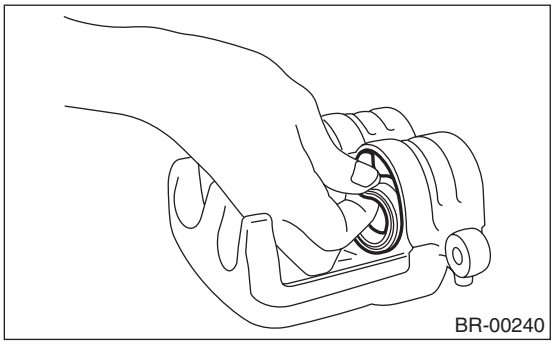

5) Remove the piston seal from caliper body cylinder.

CAUTION:
Do not damage the cylinder and piston seal groove.

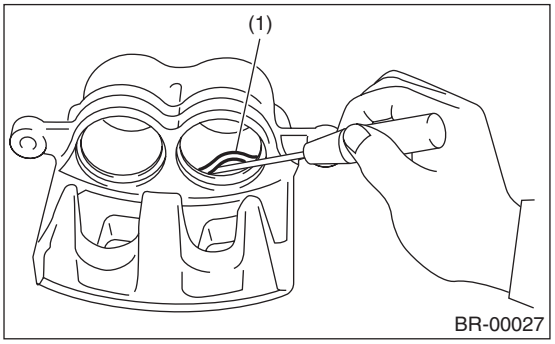

(1) Piston seal

6) Remove the guide pin and boot from caliper body.

2. 16-INCH TYPE

1) Remove mud and foreign objects from the caliper body assembly.

CAUTION:
Be careful not to allow foreign matter to enter the brake hose connector.

2) Use a flat screw driver to remove the boot ring from the piston.

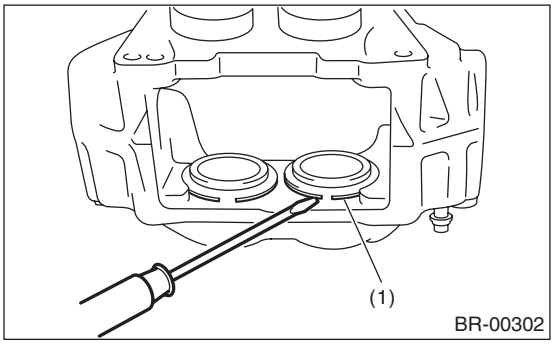

(1) Boot ring

3) Remove the boot from the piston end.

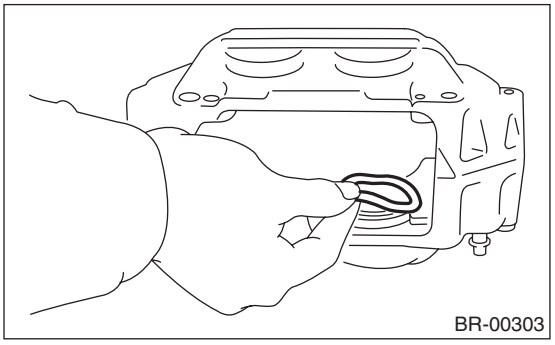

4) Place a wooden block in the caliper body as shown in the figure to prevent the piston from jumping out and being damaged.
5) Gradually apply compressed air via the brake hose installation hole to push the piston out.

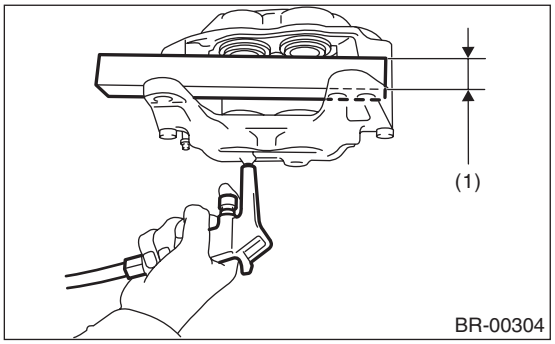

(1) Place a wooden block of 30 mm (1.18 in) width.

6) Remove the piston seal from caliper body cylinder.

CAUTION:
Do not damage the cylinder and piston seal groove.

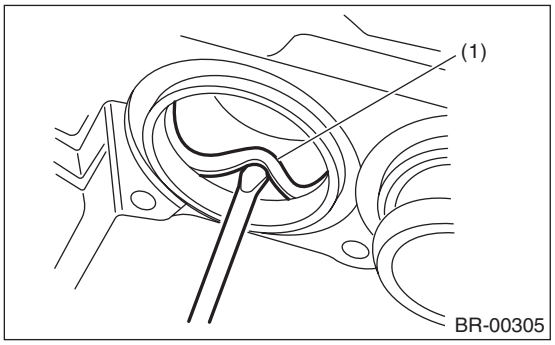

(1) Piston seal

3. 17-INCH TYPE

1) Remove mud and foreign objects from the caliper body assembly.

CAUTION:
Be careful not to allow foreign matter to enter the brake hose connector.

2) Remove the piston boot from each piston end.

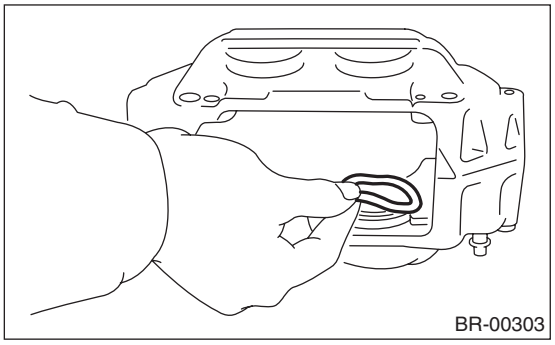

3) Place a wooden block in the caliper body as shown in the figure to prevent the piston from jumping out and being damaged.
4) Gradually apply compressed air via the brake hose installation hole to push the piston out.

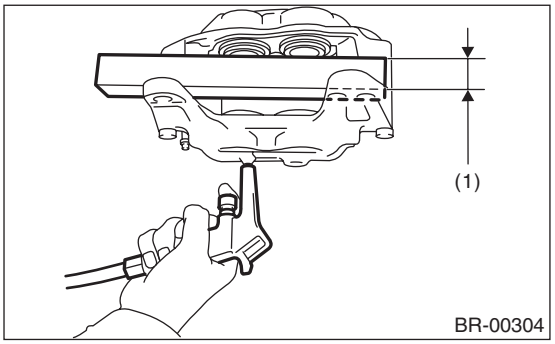

(1) Place a wooden block of 30 mm (1.18 in) width.

5) Remove the piston seal from the caliper body cylinder.

CAUTION:
Do not damage the cylinder and piston seal groove.

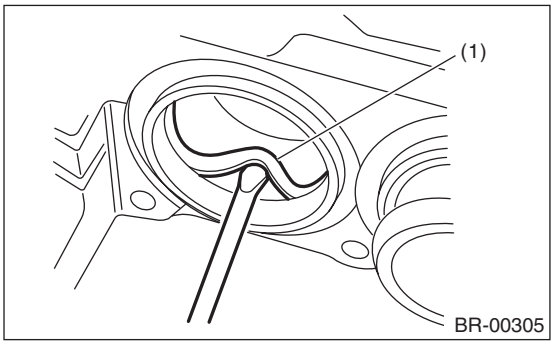

(1) Piston seal

D: ASSEMBLY

1. 15-INCH TYPE

1) Clean the inside of the caliper body using brake fluid.
2) Apply a coat of brake fluid to piston seal and install piston seal in the groove on caliper body.
3) Apply a coat of brake fluid to the inner surface of cylinder and the entire outer surface of the piston.
4) Apply a coat of specified grease to the boot, and fit to the groove on the ends of the cylinder.

Grease:
NIGLUBE RX-2 (Part No. K0779GA102)

5) Insert the piston into cylinder.

CAUTION:
Do not force the piston into cylinder.

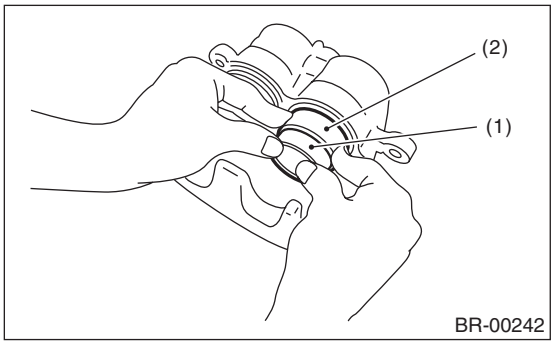

(1) Piston
(2) Piston boot

6) Position the boot in the grooves on cylinder and piston.

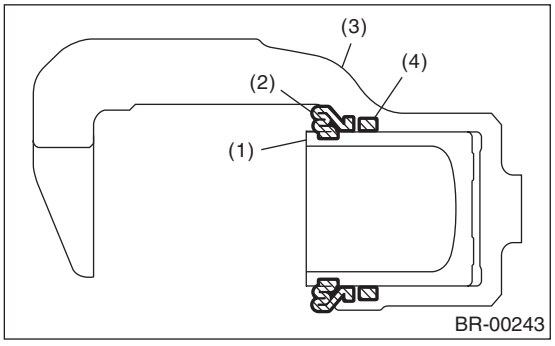

(1) Piston
(2) Piston boot
(3) Caliper body
(4) Piston seal

7) Apply a coat of specified grease to the lock pin and guide pin outer surface, cylinder inner surface, and boot grooves.

Grease:
NIGLUBE RX-2 (Part No. K0779GA102)

8) Insert the lock pin and guide pin boot into the support.

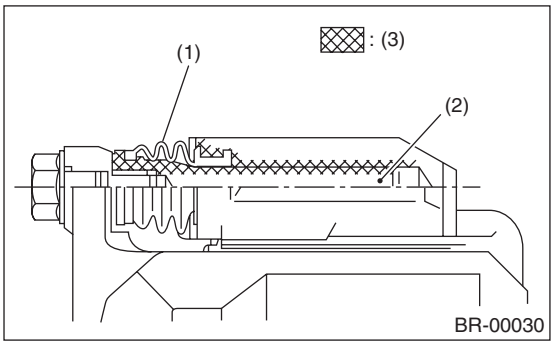

(1) Pin boot
(2) Lock pin or guide pin
(3) Grease applied area

2. 16-INCH TYPE

1) Clean the inside of the caliper body using brake fluid.
2) Apply a coat of brake fluid to piston seal and install piston seal in the groove on caliper body.
3) Apply a coat of brake fluid to the inner surface of cylinder and the entire outer surface of the piston.
4) Apply a coat of specified grease to the boot and fit to the groove on the ends of the cylinder and piston.

Grease:
NIGLUBE RX-2 (Part No. K0779GA102)

5) Insert the piston into cylinder.

CAUTION:
Do not force the piston into cylinder.

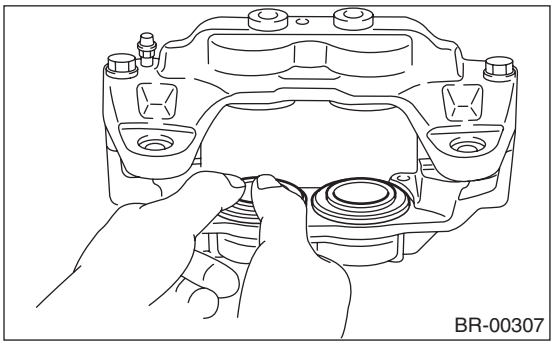

6) Position the boot in the grooves on cylinder and piston.

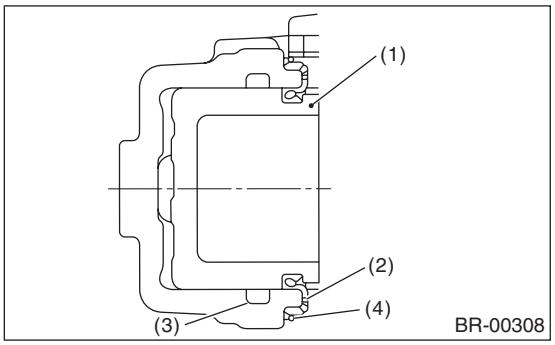

(1) Piston
(2) Piston boot
(3) Piston seal
(4) Boot ring

7) Install the boot ring. Be careful not to damage the boot.

3. 17-INCH TYPE

1) Clean the inside of the caliper body using brake fluid.
2) Apply a coat of brake fluid to piston seal and install piston seal in the groove on caliper body.
3) Apply a coat of brake fluid to the inner surface of cylinder and the entire outer surface of the piston.
4) Apply a coat of specified grease to the boot and fit to the groove on the piston.

Grease:
NIGLUBE RX-2 (Part No. K0779GA102)

5) Insert the piston into the cylinder.

CAUTION:
Do not force the piston into cylinder.

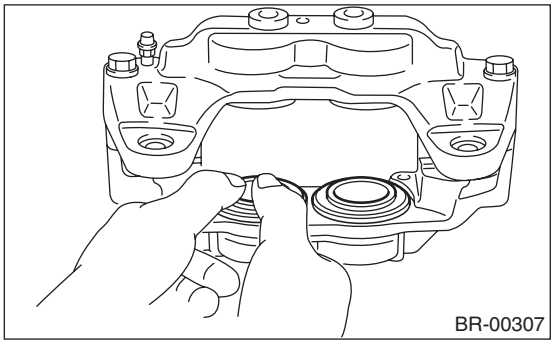

6) Position the boot in the grooves on cylinder and piston.

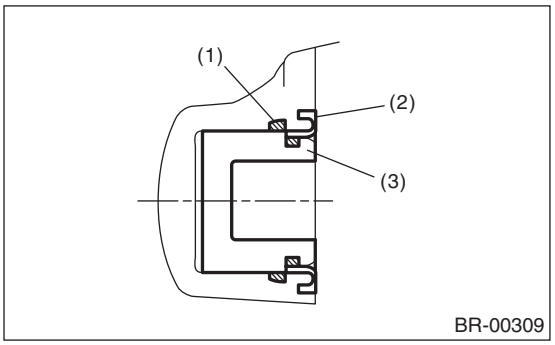

(1) Piston seal
(2) Piston boot
(3) Piston

E: INSPECTION

1) Repair or replace the faulty parts.
2) Check the caliper body and piston for uneven wear, damage or rust.
3) Check the rubber parts for damage or deterioration.